BridgeLink©

Marine Monitor Series

S19M 19” IP66 Marine Monitors

S24M 24” IP66 Marine Monitors

DNV IEC 60945 IACS-E10 Fanless

FEATURES

- **IP66 Front / IP22 Rear**
- **-15°C ~ +55°C Wide Temperature and Flat-bezel Projected Capacitive Touchscreen**
- **Excellent Visual Performance**
  - Full OSD function configuration
  - 0%~100% full range dimming
  - 178°/178° wide viewing angles
- **Multiple Video Input**
  - Two VGA, two DVI, and one BNC
- **Multiple Video Output**
  - One VGA and one BNC
- **Dual Isolated AC/DC Input with Redundant Power Protection**
- **Remote OSD Settings through LAN, RS-232, RS-422 and RS-485**

TMQ INTERNATIONAL
A MEMBER OF THE AMI GROUP

AMI-TMQ International

T +61 08 9331 0000
F +61 08 9314 2929
sales@ami-tmq.com
www.ami-tmq.com

SPECIFICATIONS

Model		S19M	S24M
LCD	LCD Size	19”	24”
	Panel Type	PMVA	AMVA
	Max. Resolution	1280 x 1024 (5:4)	1920 x 1080 (16:9)
	Contrast Ratio	2000 : 1	5000 : 1
	Brightness (cd/m²)	300	300
	LCD Color	16.7M	16.7M
	Pixel Pitch (um)	294 x 294	276.75 x 276.75
	Viewing Angles (H-V)	178° / 178°	178° / 178°
	Backlight MTBF (HRs)	50000	50000
Touchscreen & Controller		EXC7920 (10-point), 6H	EXC7200 (2-point), 6H
Scalar Chip		STDP8028	
I/O Ports		• DVI-D Signal Input: 2 x DVI (24-pin, female) • VGA Signal Input: 2 x D-sub (15-pin, female) • VGA Signal Output: 1 x D-sub (15-pin, female) - Clone of VGA IN* • Composite Video Input: 1 x BNC connector (female) Composite Video Output: 1 x BNC connector (female) • RS-232/422/485 for Remote control (non-isolated) • Touchscreen: 1 x USB Type A connector (female) • Ethernet: 1 x RJ-45 connector for remote control • Isolated AC Power Inlet: 100V~240V AC • Isolated DC Terminal Block: 18V~36V DC • 1 x Buzzer	
PIP		Yes	
OSD Button		P-CAP button (LCD on/off, Menu, Auto, Up, Down, Left, Right)	
LED/Sensor		Ambient light sensor (0%~100%)	
Power Requirement		Multi-power Supply: Isolated AC Power: 100-240V, 2-1A, 50-60Hz Isolated DC Power: 18-36V, 8-4A	
Operating Temperature		-15°C ~ 55°C	
Storage Temperature		-20°C ~ 60°C	
Humidity		5% to 95% RH	
Thermal Design		Fanless	
Housing		Aluminum front , sheet metal back (Black C)	
Cut-out Dimensions (W x L)		442 mm x 373 mm	576 mm x 358 mm
Dimensions (W x L x D)		463 mm x 394 mm x 113 mm	592 mm x 374 mm x 113 mm
Mounting		VESA 100mm x 100mm	VESA 100mm x 100mm
Net Weight (kg)		7.74	11.48
Gross Weight (kg)		11.54	15.97
Approvals		EMC: CE, FCC	
		Safety: DNV, IEC 60945 4th, IACS-E10	
		IP Rating: IP66 front, IP22 rear	

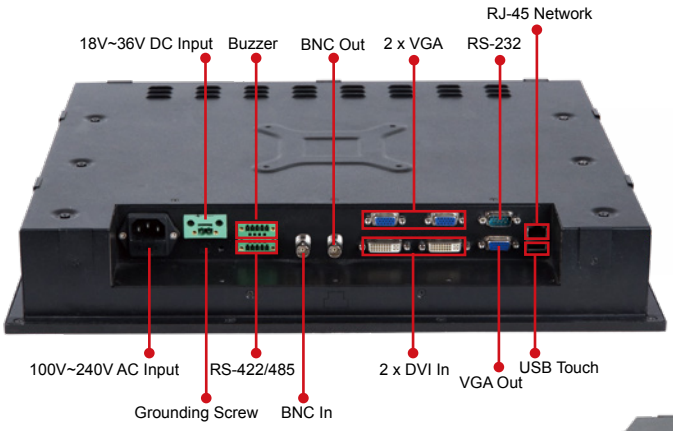

S19M
Fully Integrated I/O

S24M
Fully Integrated I/O

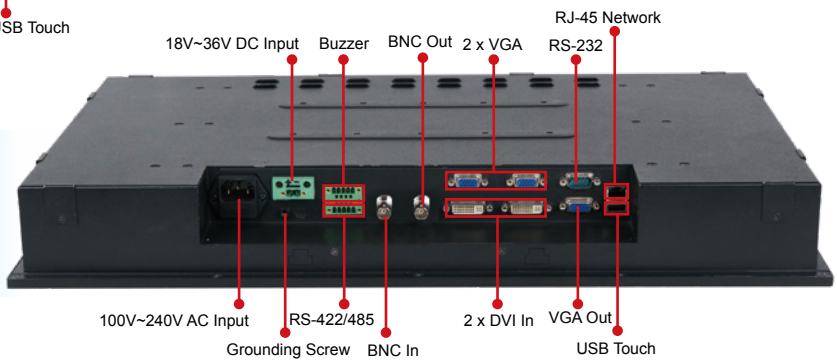

DIMENSIONS

S19M

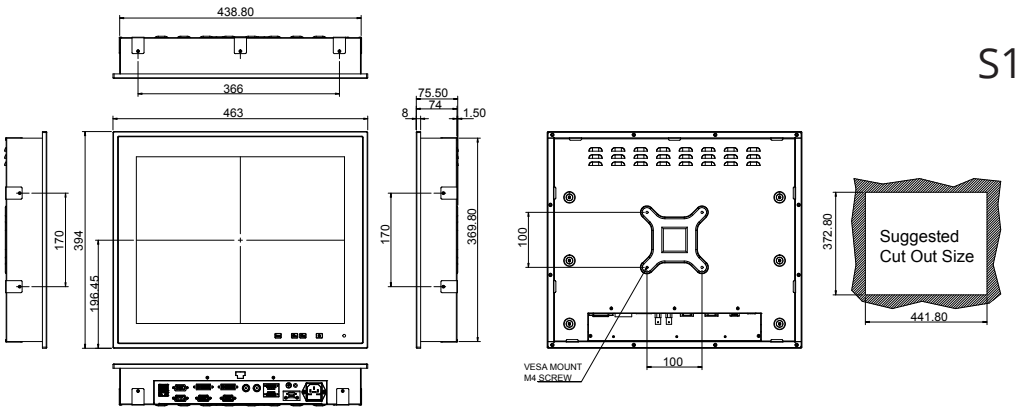

S24M

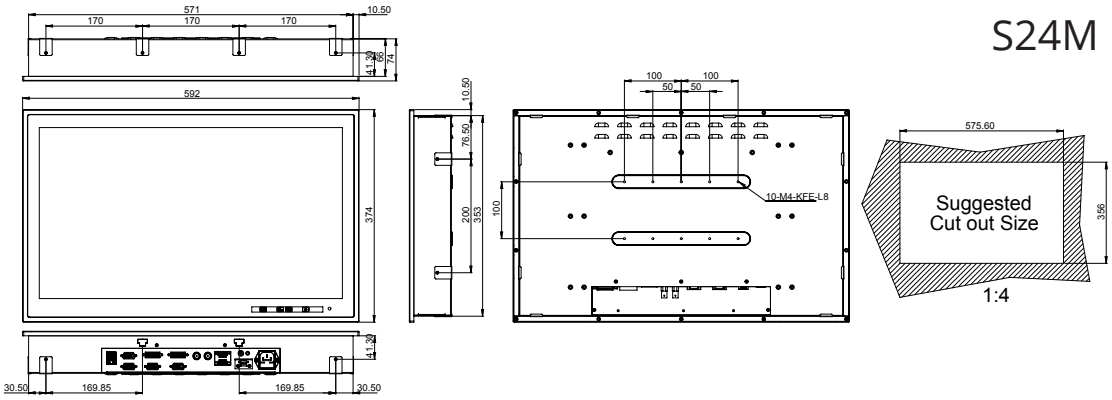

ORDERING INFORMATION

PN	Description
S19M-AD/PC-R10	19” SXGA 300cd/m² marine display with AC and DC redundant power, PCAP touch-screen, R10
S24M-AD/PC-R10	24” FHD 300cd/m² marine display with AC and DC redundant power, PCAP touch-screen, R10

OPTIONS

Item	Part No.	Description
Panel Mount Kit	PK-S19M-R10	For S19M
	PK-S24M-R10	For S24M
Desktop Stand	STAND-A21-R10	For S19M & S24M

PACKING LIST

Item	Q'ty	Remark
User Manual & Driver CD	1	Drivers and user manual
VGA	1	VGA signal cable
DVI	1	DVI signal cable
USB	1	USB touchscreen cable
Power Cord	1	Power cord
S19M or S24M	1	

INTERNATIONAL
A MEMBER OF THE AMI GROUP

AMI-TMQ International

T +61 08 9331 0000
F +61 08 9314 2929
sales@ami-tmq.com
www.ami-tmq.com